DO- 4

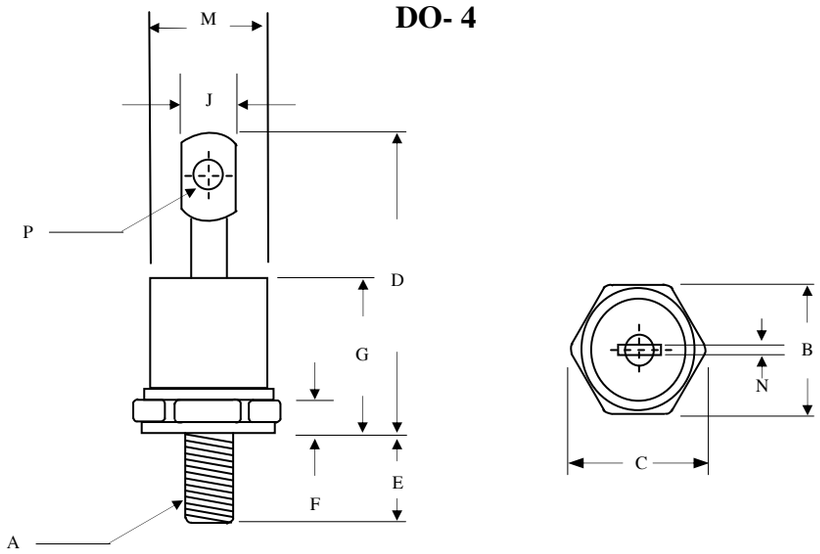

DIM A	Inches		Millimeters	
	Min	Max	Min	Max
A	10-32 UNF			
B	0.424	0.439	10.77	11.15
C	-----	0.505	-----	12.82
D	------	1.29	-----	30.92
E	0.41	0.492	11.10	12.50
F	0.114	0.140	2.90	3.50
G	-----	0.42	-----	10.66
J	-----	0.216	-----	5.50
M	-----	φ 0.336	-----	φ 8.54
N	0.031	0.045	0.80	1.15
P	0.065	0.085	1.68	2.16

Dimensions in inches and (millimeters)